MOLD TYPE	MOLD NO.	ITEM
CONN. OVERMOLD	CPO0380	3,4
CONN. COVER	PPO0239	9

REV.	ECN NO.	DATE	BY	DESCRIPTION
1		Dec/26/2023	Edda Wan	RELEASED

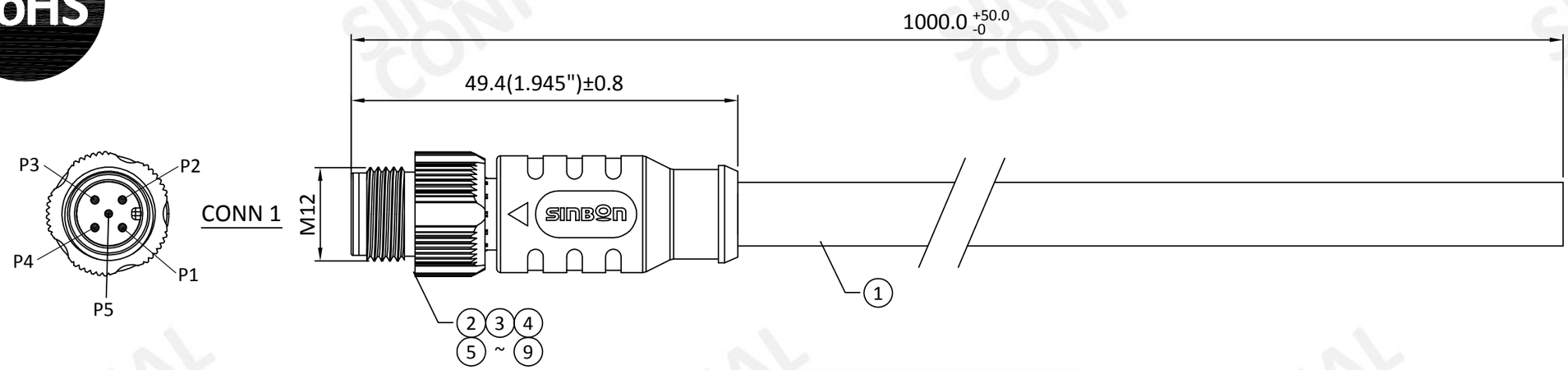

WIRE RUN LIST		
AWG	CONN 1	COLOR
24	1	BROWN
	2	WHITE
	3	BLUE
	4	BLACK
	5	GRAY

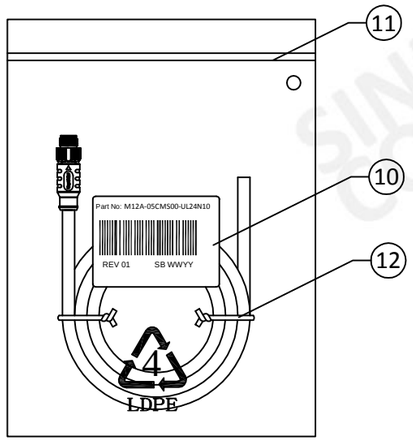

PACKING

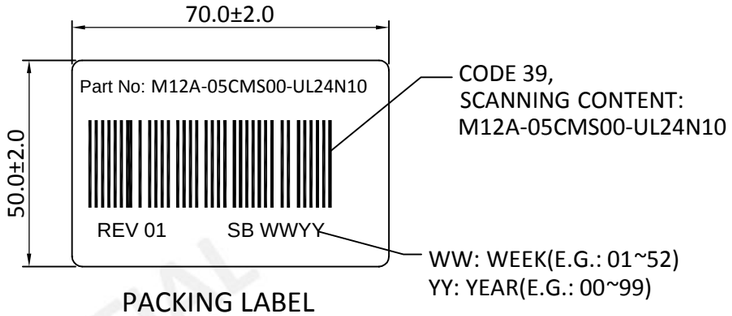

PACKING LABEL

NOTES:

1. TEST FOR OPEN, SHORT, CONTINUITY BASED ON THE WIRE RUN LIST.
   TEST PARAMETERS:
   - MAX. COND. RESISTANCE: 3Ω
   - MIN. INSUL. RESISTANCE: 100MΩ
   - TESTING VOLTAGE: 300V DC
2. IP67 WHEN MATED.
3. FOLLOW IPC620 CLASS II STANDARD TO ASSEMBLY AND INSPECTION.
4. RoHS COMPLIANCE (2011/65/EU & 2015/863/EU)

ITEM	QTY	DESCRIPTION
12.	A/R	CABLE,MINI TAPE,BLACK
11.	1	ZIPPER BAG,320*400*0.08
10.	1	BLANK LABEL,70*50
9.	A/R	PE,TRANS-CLEAR
8.	A/R	GLUE,N/A,BLACK BROWN,5-40℃,12MONTH
7.	A/R	GULE,N/A,TRANSLUCENT,5-40℃,6MONTH
6.	A/R	PU ADHESIVE,BROWN,EAST-GRACE
5.	A/R	PU ADHESIVE,BLACK,EAST-GRACE
4.	A/R	PLASTIC MASTERBATCH,BLACK,FOR TPU
3.	A/R	TPU, SHORE A 78P, NATURAL, HF
2.	1	I/O CONN., MALE, 5P
1.	A/R	CABLE, UL20549, #24*5C+AEB, 0D=5.2

THIS DRAWING CONTAINS CONFIDENTIAL INFORMATION AND IS THE PROPERTY OF SINBON ELECTRONICS CO., LTD.
IT MAY NOT BE USED OR ITS CONTENTS COPIED OR DISCLOSED TO A THIRD PARTY WITHOUT PRIOR WRITTEN CONSENT
AND IS TO BE RETURNED PROMPTLY UPON REQUEST BY SINBON ELECTRONICS CO., LTD.

CUSTOMER : SINBON Webshop

CUSTOMER P/N : M12A-05CMS00-UL24N10 REV. 01

UNLESS OTHERWISE SPECIFIED TOLERANCE :
1 ~ 10 : ± 1
11 ~ 30 : ± 2
31 ~ 50 : ± 3
51 ~ 200 : ± 5
201 ~ 400 : ± 7
> 401 : ± 10
ANGLES : ± 1°

DRA. Dec/26/2023 Edda Wan
CHK. Dec/26/2023 Kevin Qiu
APR. Dec/26/2023 Kevin Qiu

SINBON Electronics Co., Ltd.

DESCRIPTION : 5P male pigtail anti-vibe IP67, 1M

PART NUMBER : C A9876496 REV. 1

SIZE	UNIT	SCALE	SHEET
A3	mm	NONE	1 of 1

GDP-D-071 A